VIAVI Solutions

VIAVI OHH

SmartPocket™ V2 Overview

February 2021

VIAVI Optical Handhelds (OHH)

SmartClass Fiber Family

SmartPocket Family

© 2021 VIAVI Solutions Inc.

VIAVI SmartPocket™ Family

- Light Sources
  - OLS-34V2*
  - OLS-35V2
  - OLS-36V2
  - OLS-38V2*

- BB Power Meters
  - OLP-35V2
  - OLP-35SC
  - OLP-38V2

- PON Power Meter
  - OLP-37XV2

- TruePON PMs
  - OLP-39G*
  - OLP-39XG*

- Optical Test Kits
  - OMK-35V2
  - OMK-36V2
  - OMK-38V2

* Will be introduced during CY 2021

© 2021 VIAVI Solutions Inc.

SmartPocket™ Features and Benefits

Ultra-reliable German design
built for rugged, outdoor use
still fits in your pocket!

Improved protection cap
can be fully opened

Huge storage capacity
> 1000 test results

Softkey flexibility

Multiple power options (4-way)
2x Alkaline AA, 2x NiMH AA
rechargeable, AC power adapter, USB

Bluetooth low energy connectivity
to the VIAVI Mobile Tech App

New high-visibility graphical display
with backlight

Innovative low-power design
exceptionally long battery life up
to 70 hrs. continuous operation

USB-C interface
powering, offload of results,
connection to PC

© 2021 VIAVI Solutions Inc.

Economical Adapter System

Switchable Adapters:

- SC (mounted)
- FC (spare)
- optional: ST, LC

Universal Pull Push (UPP) adapter system for all connector types:

- 2.5 mm adapter (for SC, FC, ST connectors)
- optional: 1.25 mm adapter (for LC, MU connectors)

© 2021 VIAVI Solutions Inc.

Easy Operation

- As easy as it gets…
  - Instant-on and measure!

- …with the capability of a high-end handheld
  - Auto-λ function
  - Multi-λ function
  - Fiber ID via tone detection (270 Hz, 330 Hz, 1 kHz and 2 kHz)

© 2021 VIAVI Solutions Inc.

Light Sources

- OLS-35V2
  - SM Laser Source 1310 / 1550 nm
  - w/ mounted SC and enclosed FC adapter*
- OLS-36V2
  - SM/MM Quad Source 850 / 1300 nm and 1310 / 1550 nm
  - w/ mounted SC and enclosed FC adapter*

* for PC – physical contact interconnects (black cap)

© 2021 VIAVI Solutions Inc.

Broadband Power Meters

	OLP-35V2	OLP-35SC	OLP-38V2
Power Range	-65 … +10 dBm		-50 … +26 dBm
Calibrated Wavelengths	850, 980, 1310, 1490, 1550, 1577, 1625, 1650 nm		
Adapter (mounted)	UPP 2.5 mm	SC	UPP 2.5 mm

© 2021 VIAVI Solutions Inc.

Optical Test Kits

- OMK-35V2
  - SM kit
  - OLS-35V2 + OLP-35V2
  - Telecom Applications
- OMK-38V2
  - High Power SM kit
  - OLS-35V2 + OLP-38V2
  - CATV / amplified DWDM
- OMK-36V2
  - Quad SM/MM kit
  - OLS-36V2 + OLP-35V2
  - Enterprise LAN/WAN

Accessories

Individual optical light sources:
• soft case, neck strap, dry AA-batteries, quick start guide, switchable optical adapter (varies depending on units: UPP 2.5mm can be changed for UPP 1.25mm, SC changed to FC)
Individual broadband and PON power meters:
• soft case, neck strap, dry AA-batteries, USB-C Cable, quick start guide, switchable optical adapter (varies depending on units: UPP 2.5mm can be changed for UPP 1.25mm, SC changed to FC)
Optical test kits:
• 1 x OLS, 1 x OLP, kit bag, universal AC power adapter

© 2021 VIAVI Solutions Inc.

Example Construction Applications

Multi-Service PON Build

G/XGS-PON or E/10G EPON

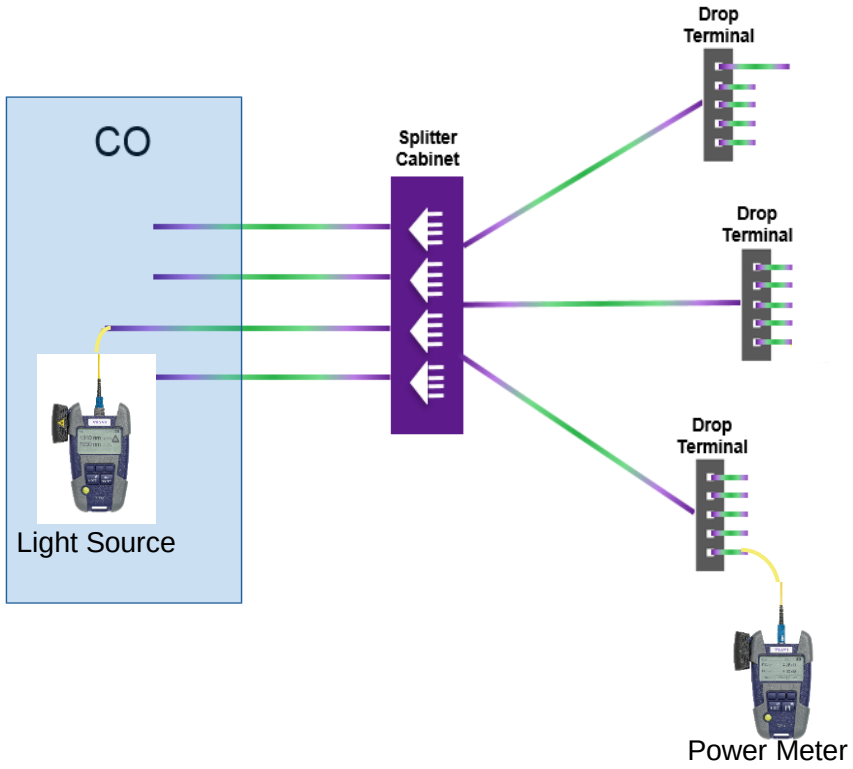

FTTA Build

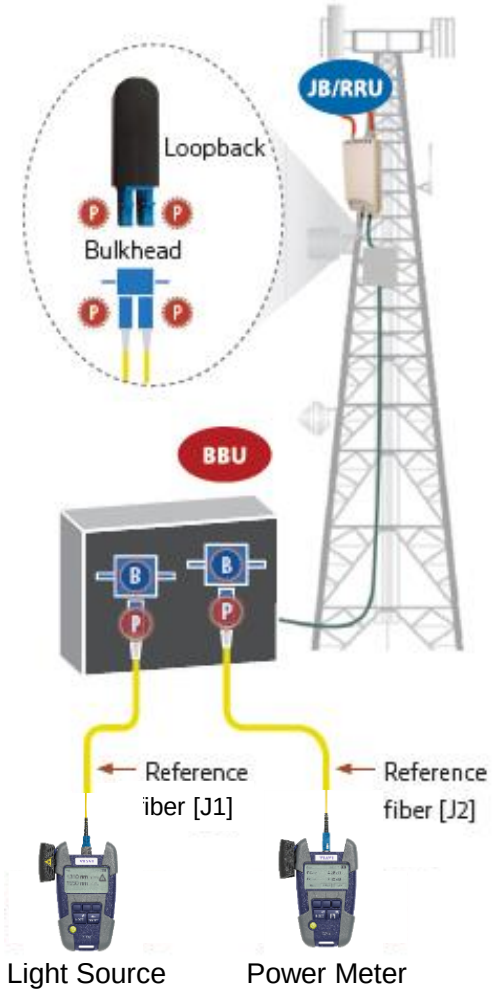

Enterprise Build

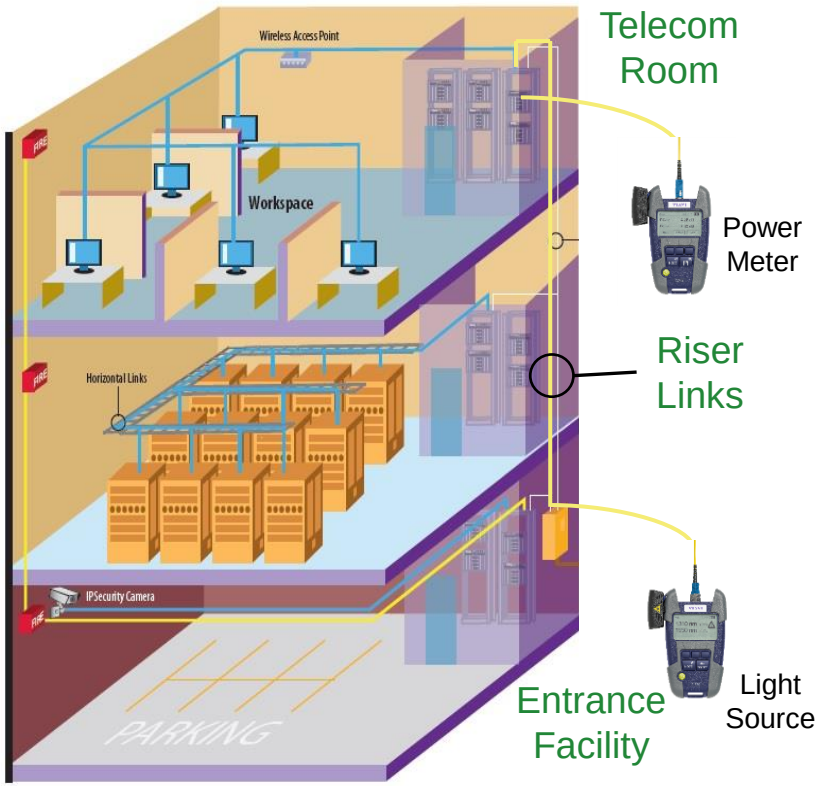

© 2021 VIAVI Solutions Inc.

PON Power Meter

- OLP-37XV2
  - selective G+XGS-PON PM 1490 / 1577 nm
  - w/ mounted SC and enclosed FC adapter*

* for APC – angled physical contact interconnects (green triangle on cap)

© 2021 VIAVI Solutions Inc.

Example Construction Applications

Multi-Service PON Build

G/XGS-PON or E/10G EPON

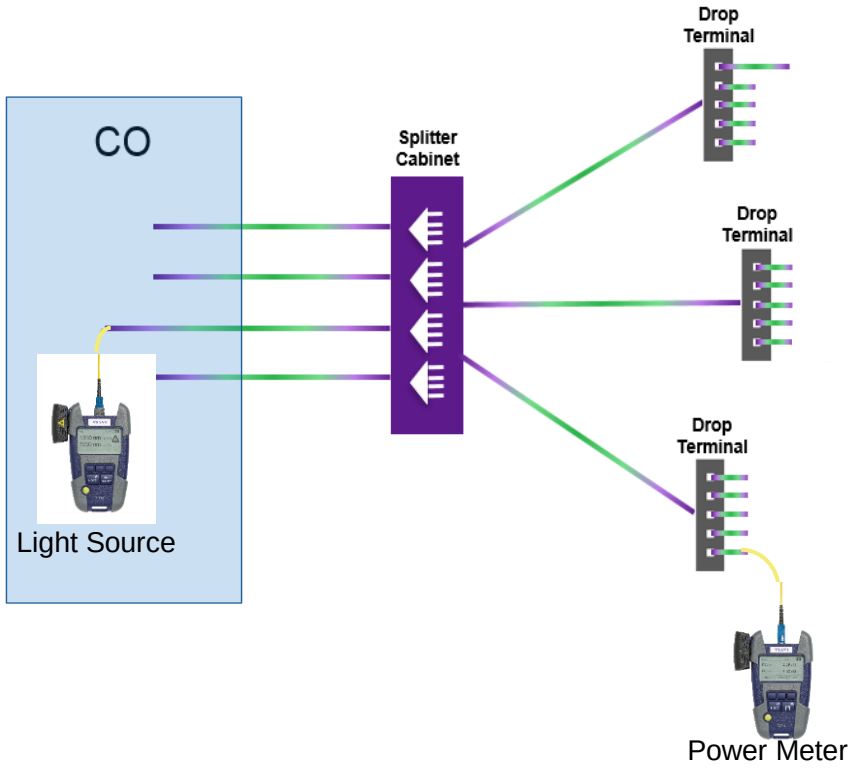

FTTA Build

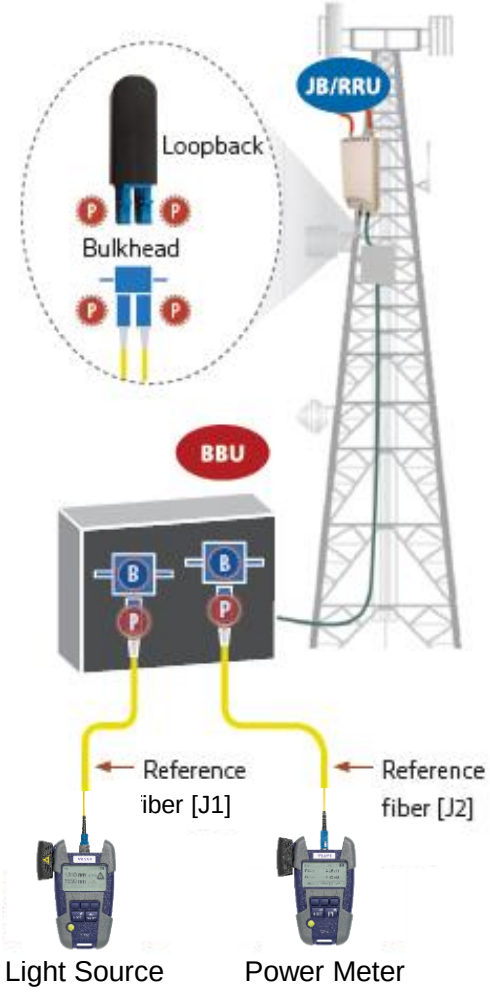

Enterprise Build

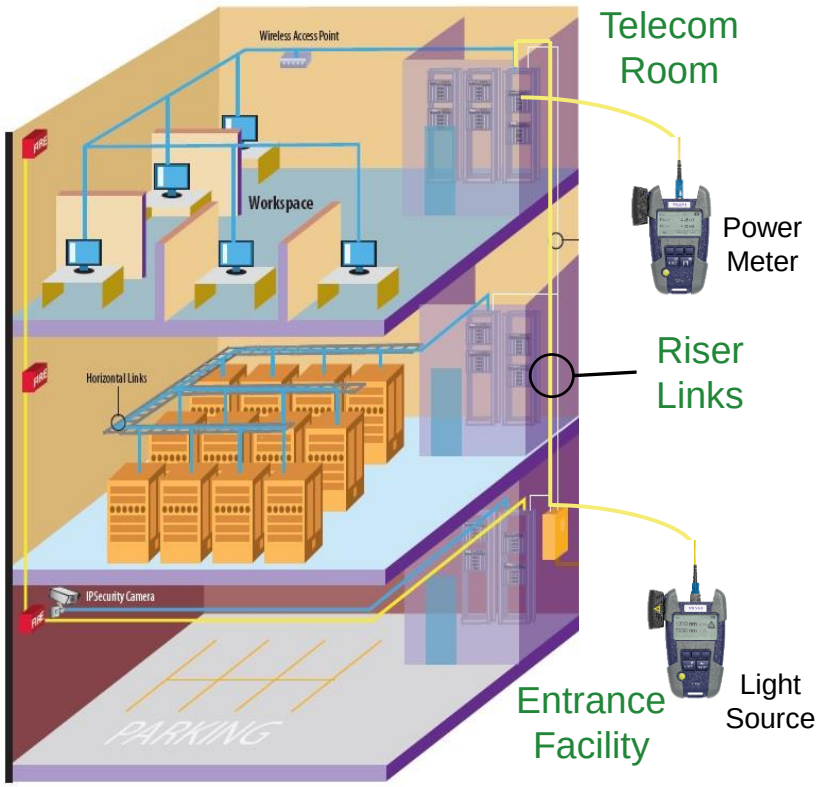

© 2021 VIAVI Solutions Inc.

VIAVI Solutions

viavisolutions.com